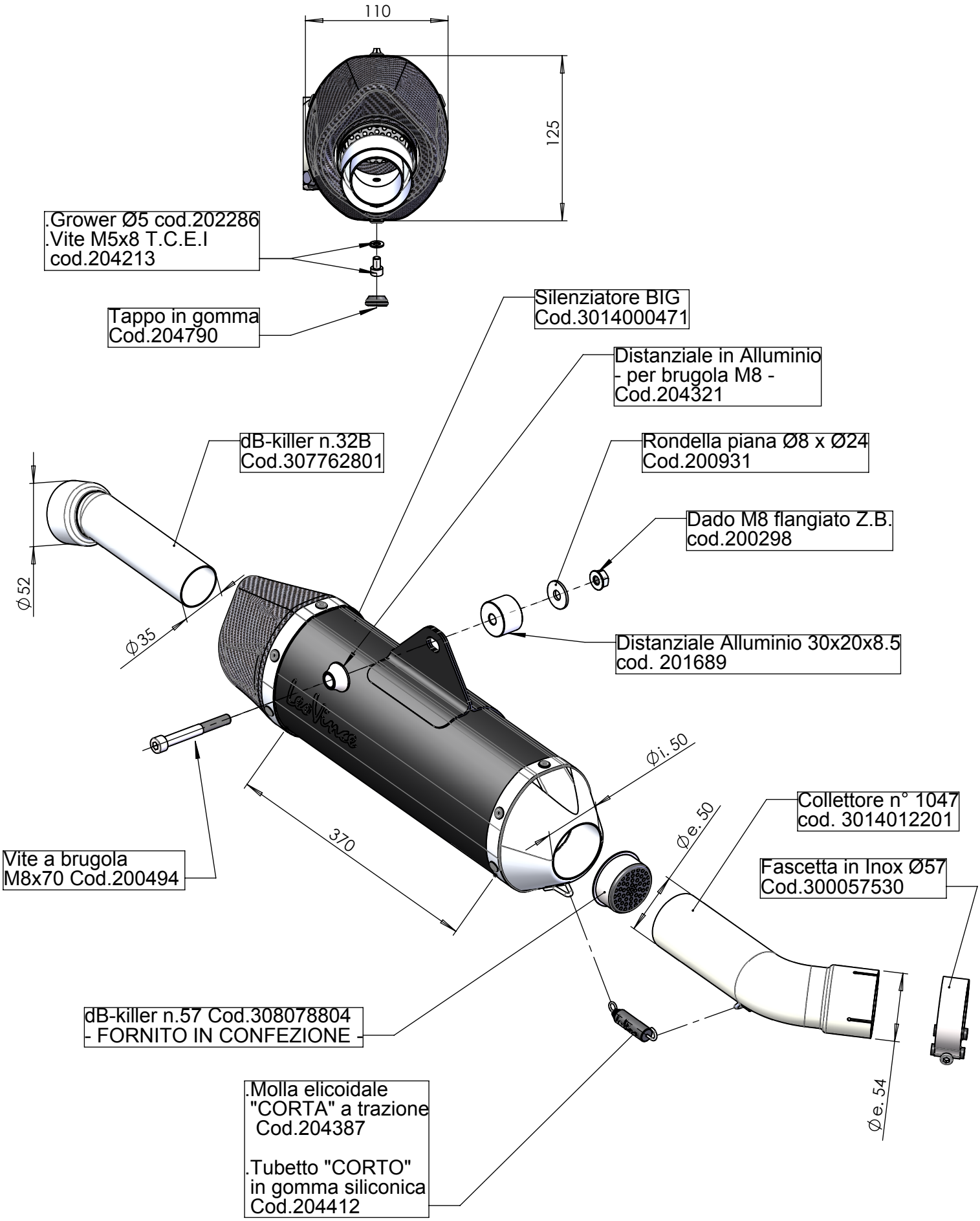


KYMCO XCITING 400 i.e. '13 / '14

Art. 14012 Slip-on LEOVINCE "NERO" <<BIG>>
Passaggio STANDARD OMOLOGATO "EVOLUTION II"