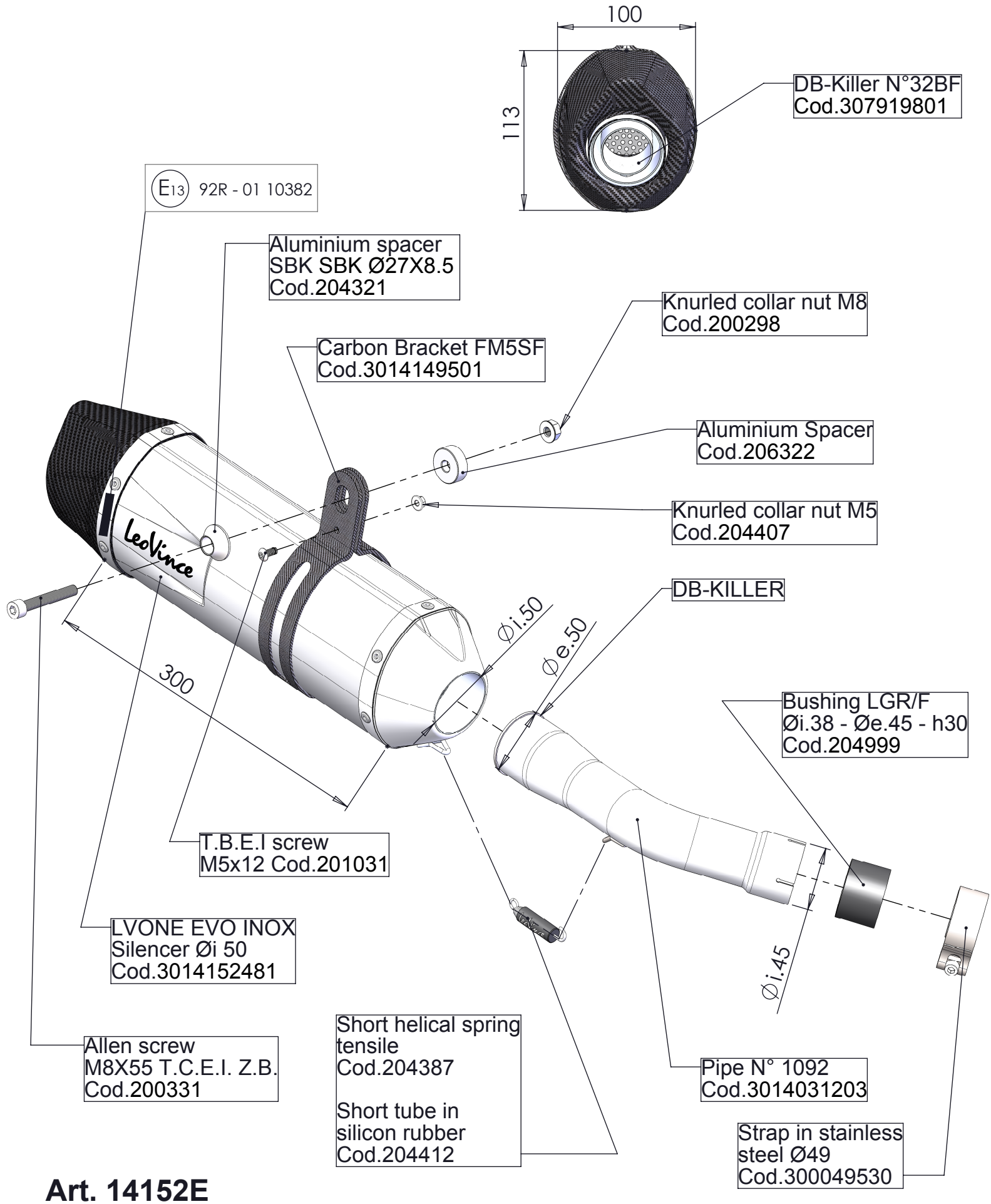

Art. 14152E

SUZUKI SV 650

Slip-on - LV ONE EVO Stainless Steel - APPROVED