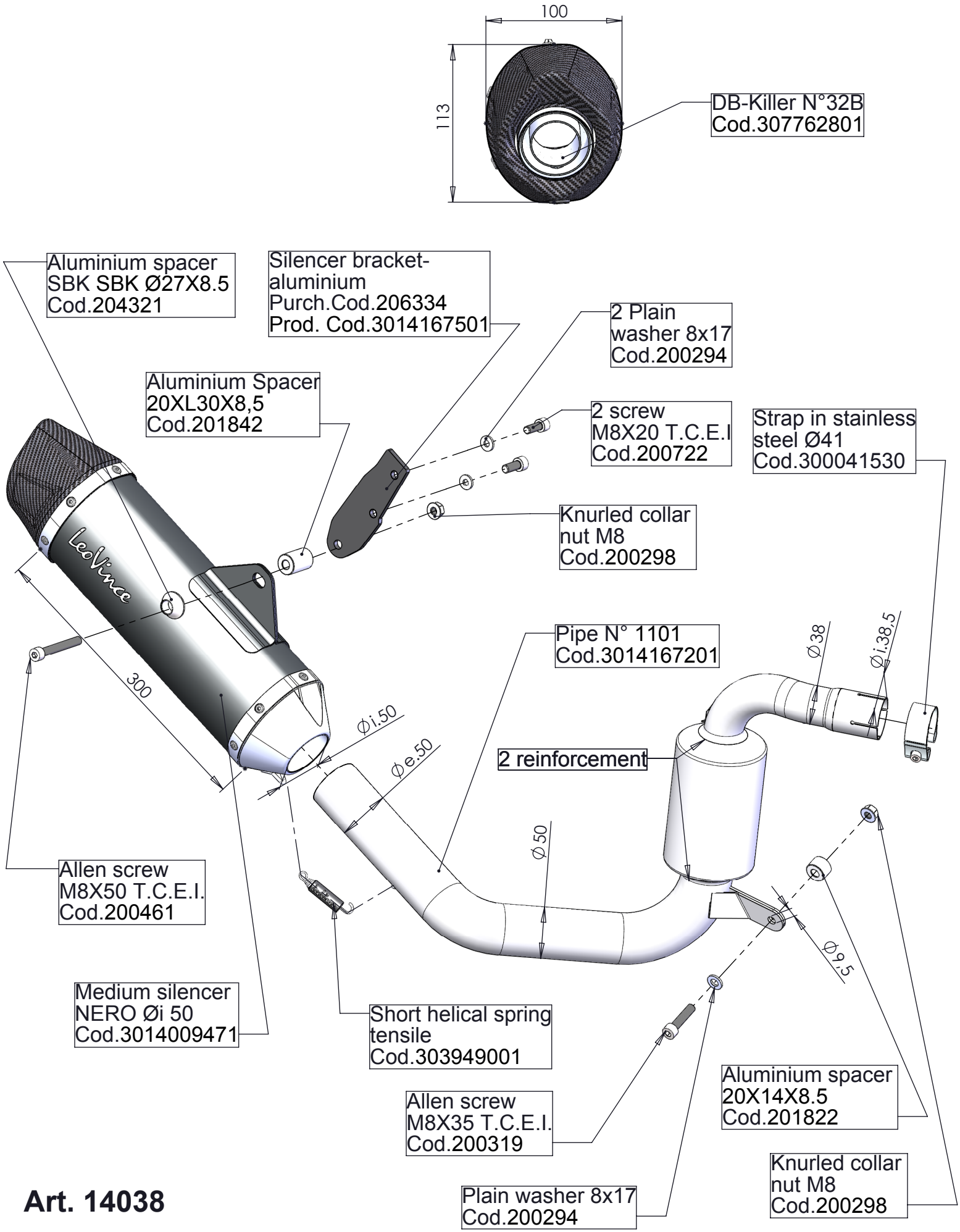

Art. 14038

KTM RC 125

Slip-on "NERO" - APPROVED