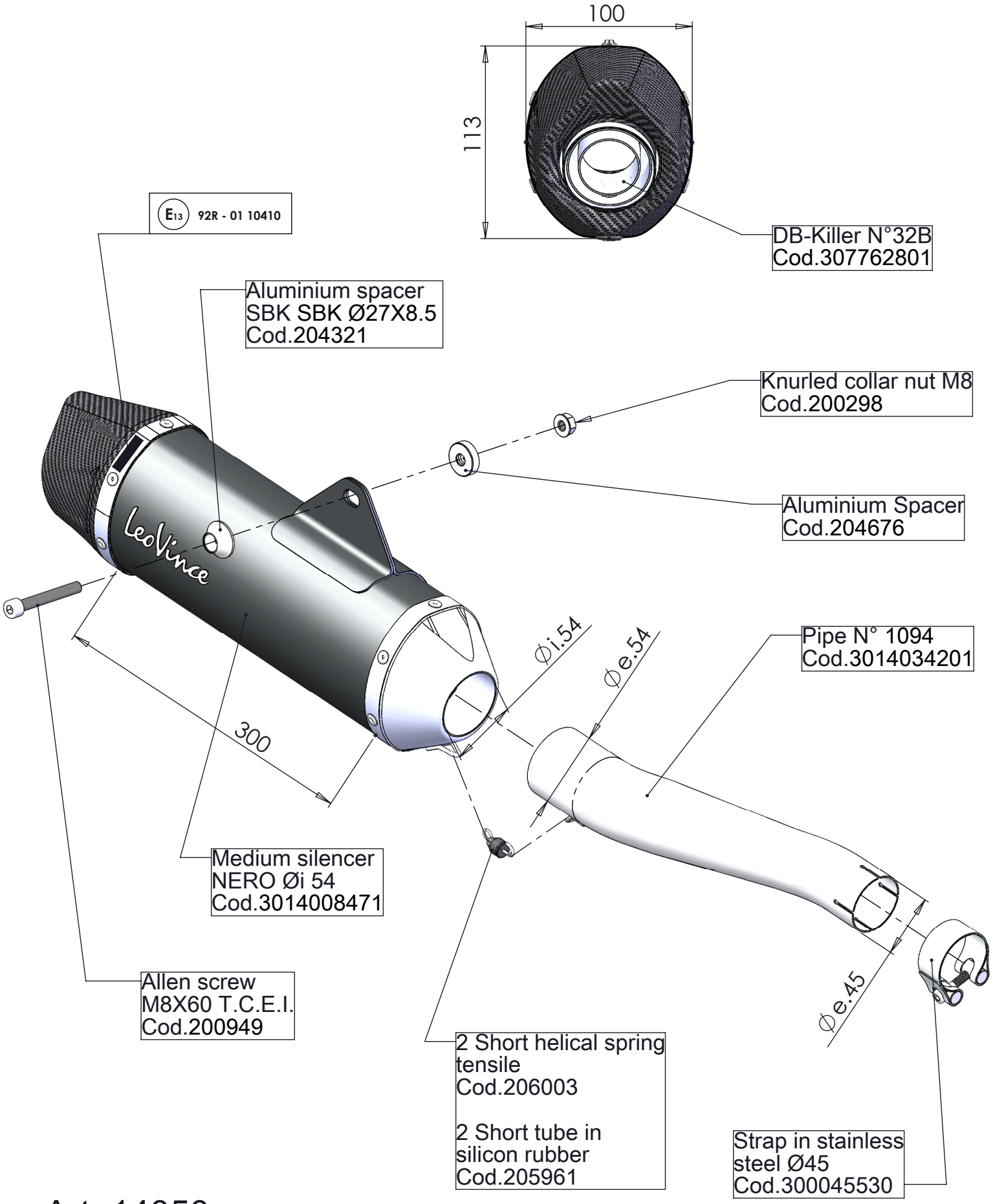

Art. 14050

HONDA CB 500 F (do not fit with centre stand) - CBR 500 R

Slip-on - "NERO" - APPROVED