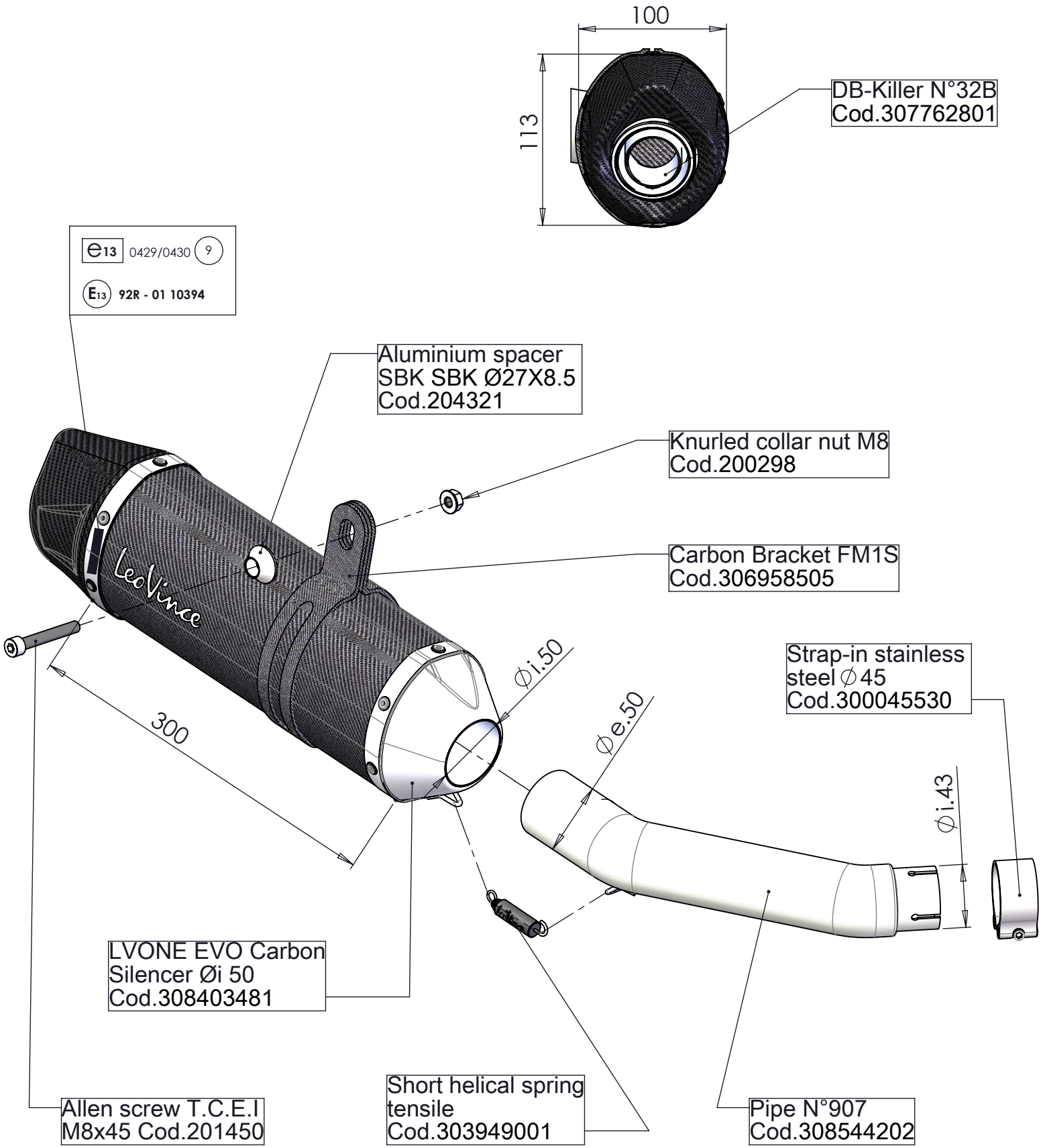

Art. 14176E

SUZUKI GSX-S 750 ABS

Slip-on SBK "LV ONE EVO" CARBON - APPROVED