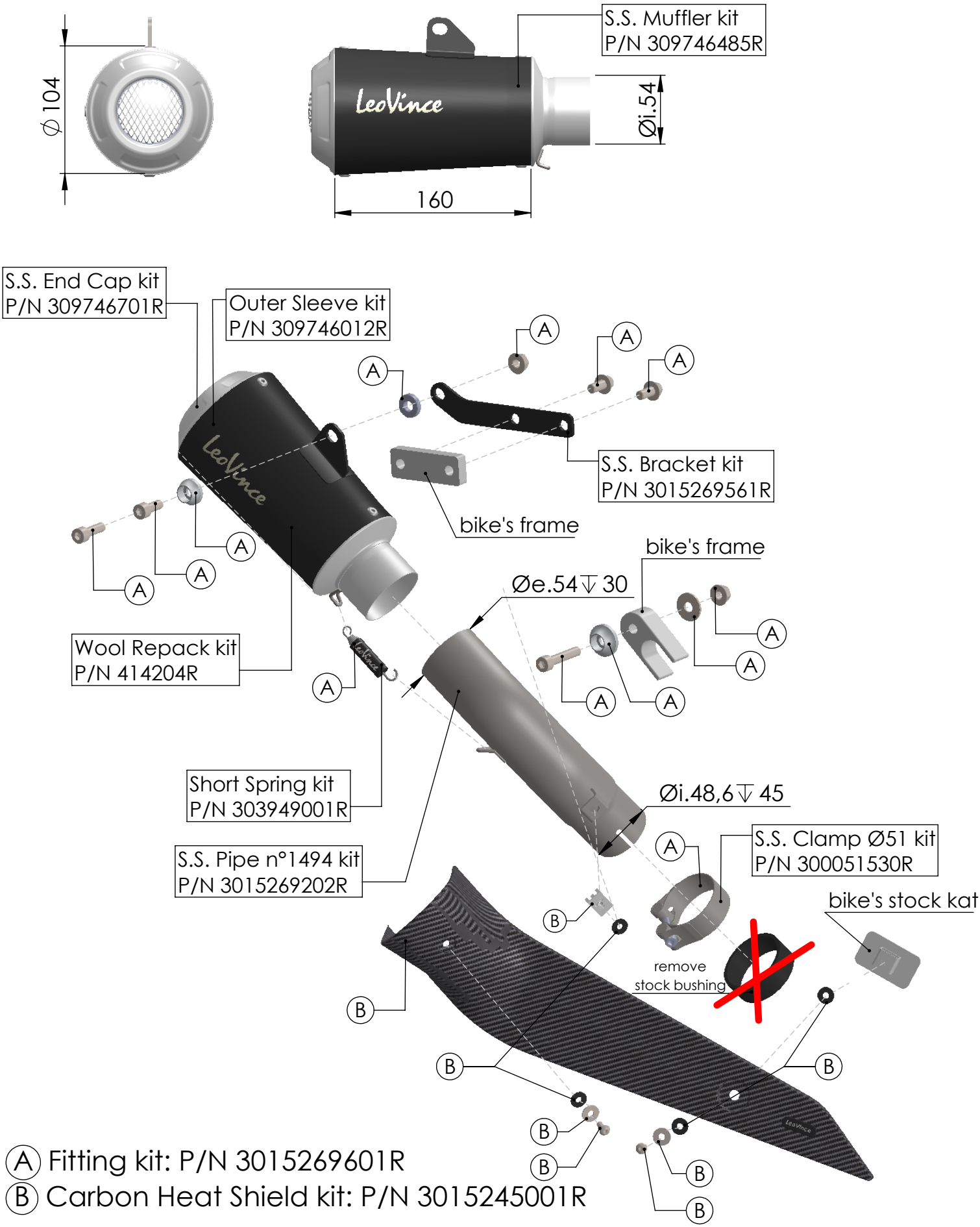

(A) Fitting kit: P/N 3015269601R
(B) Carbon Heat Shield kit: P/N 3015245001R

ART. 15269B - SPARE PARTS

SUZUKI GXS-S 1000 GX / GT

SLIP-ON LV-10 BLACK EDITION APPROVED