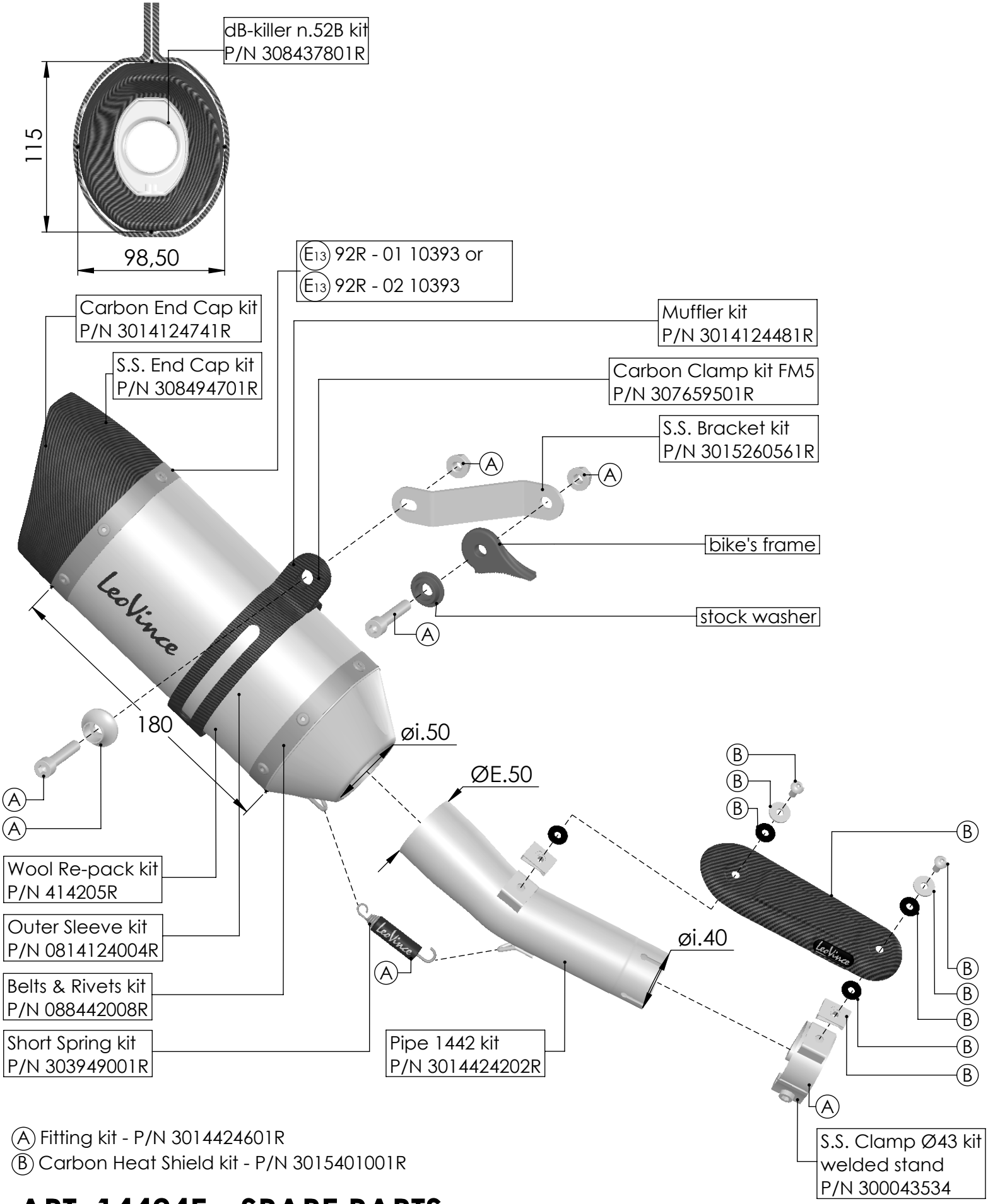


Ⓐ Fitting kit - P/N 3014424601R
Ⓑ Carbon Heat Shield kit - P/N 3015401001R

# ART. 14424E - SPARE PARTS

DUCATI MONSTER 937 - (also fits 35kW version)

SLIP-ON - LV PRO - STAINLESS STEEL - APPROVED