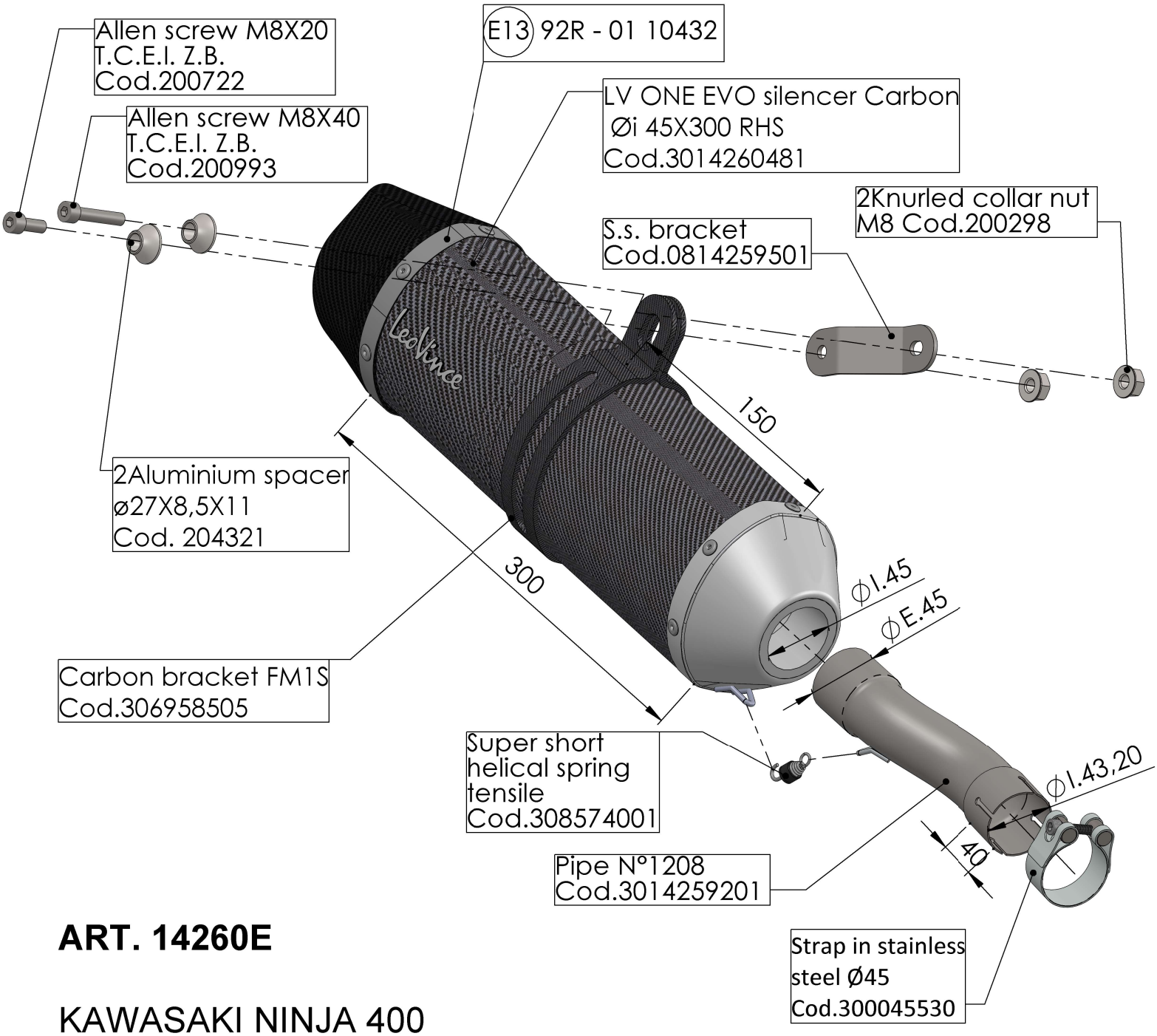

ART. 14260E

KAWASAKI NINJA 400

SLIP-ON - LV ONE EVO - CARBON - APPROVED