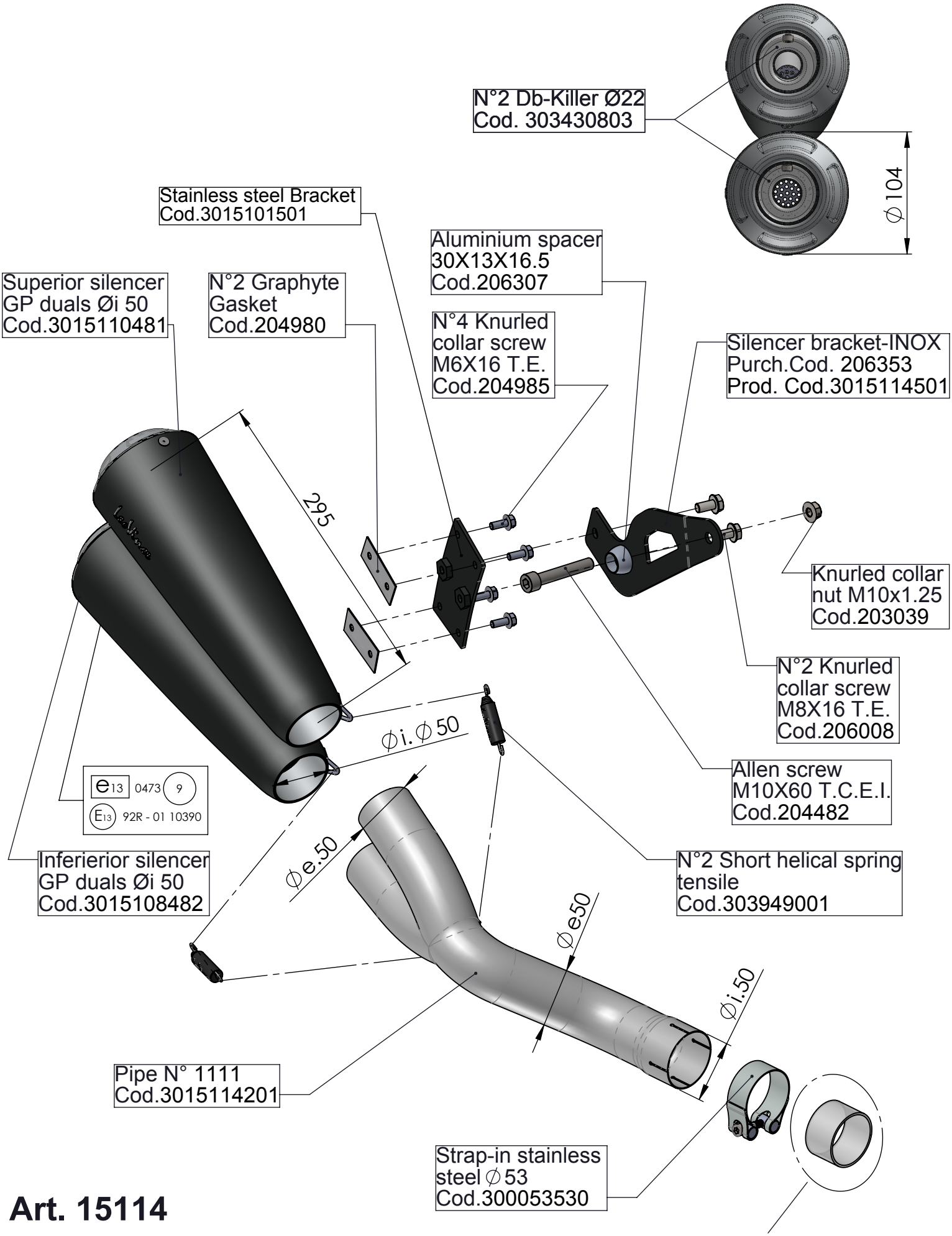

Art. 15114

KAWASAKI Z900

Slip-on "GP DUALS" - APPROVED

PLEASE REMOVE THE ORIGINAL
GRAPHITE BUSHING
BEFORE ASSEMBLING
THE LEOVINCE LINK PIPE!!