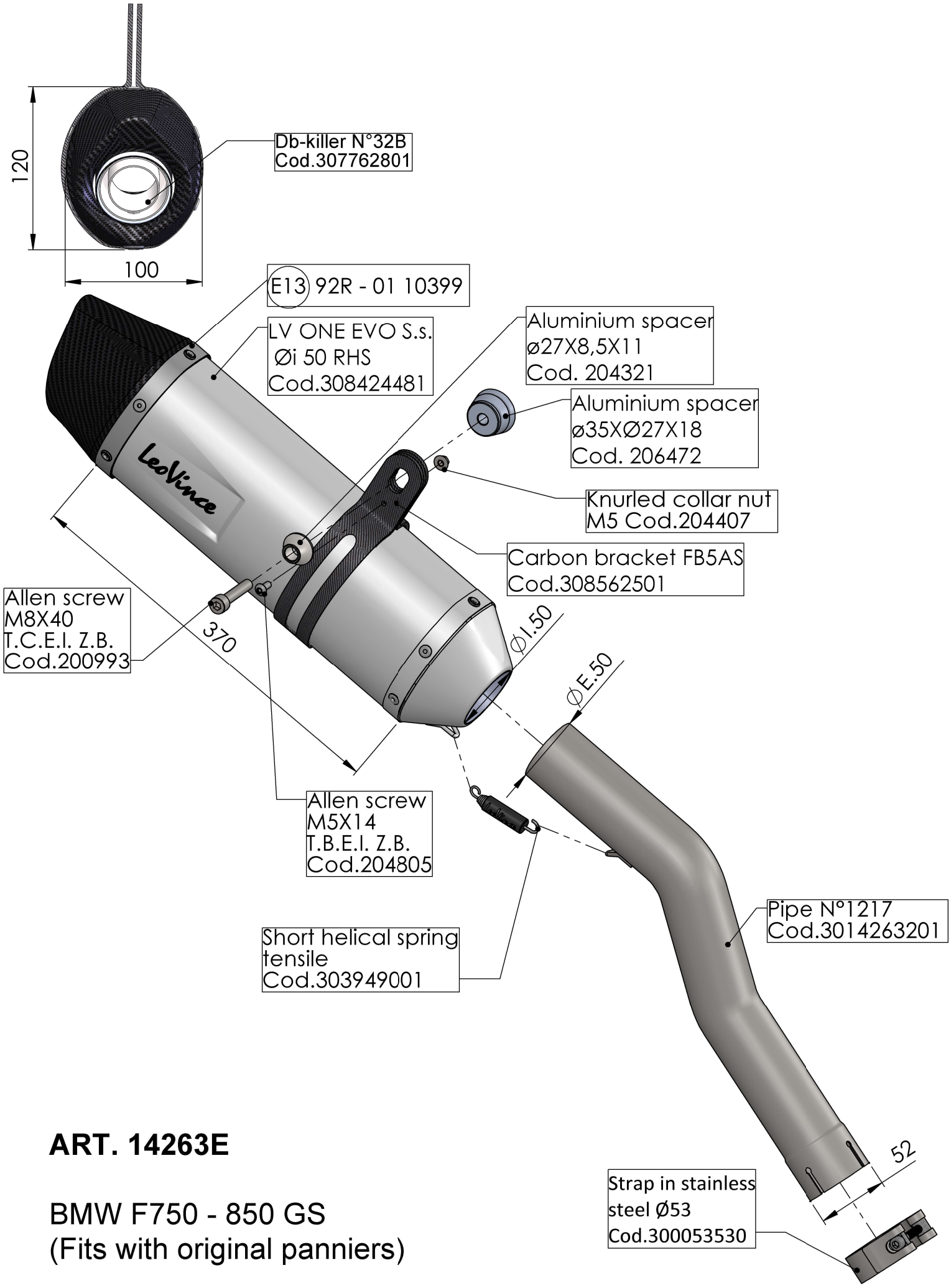

ART. 14263E

BMW F750 - 850 GS
(Fits with original panniers)

SLIP-ON - LV ONE EVO - STAINLESS S. - APPROVED