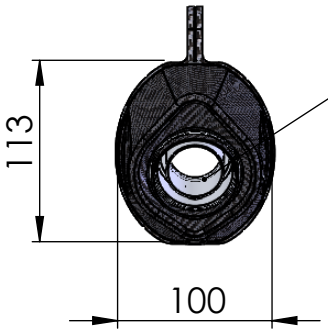

Db-killer N°32B
cod.307762801R

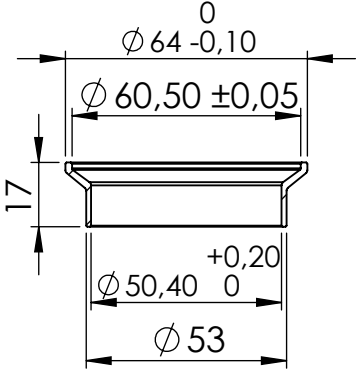

bushing
cod.206079

LV ONE EVO silencer Stainless s.
Øi 50X300 RHS
Cod.308402481

E13 92R - 01 10394

PASSENGER'S R.H. FOOTBOARD

Knurled collar nut
M8 Cod.200298

Plain washer
∅8x24 Z.B
Cod.200321

Aluminium spacer
øe.25-11x18x8.2
Cod. 205779

Carbon clamp FM1
Cod.306958501

300

∅i.50

∅e.50

Aluminium spacer
ø27X8,5
Cod. 204321

Allen screw M8X40
T.C.E.I. Z.B.
Cod.200993

Short helical spring
tensile
Cod.303949001

Pipe N°963
Cod.308703202

S.S. Welding bushing
Cod.206079

ART. 14302E

KTM 690 DUKE

SLIP ON - LV ONE EVO - STAINLESS STEEL - APPROVED