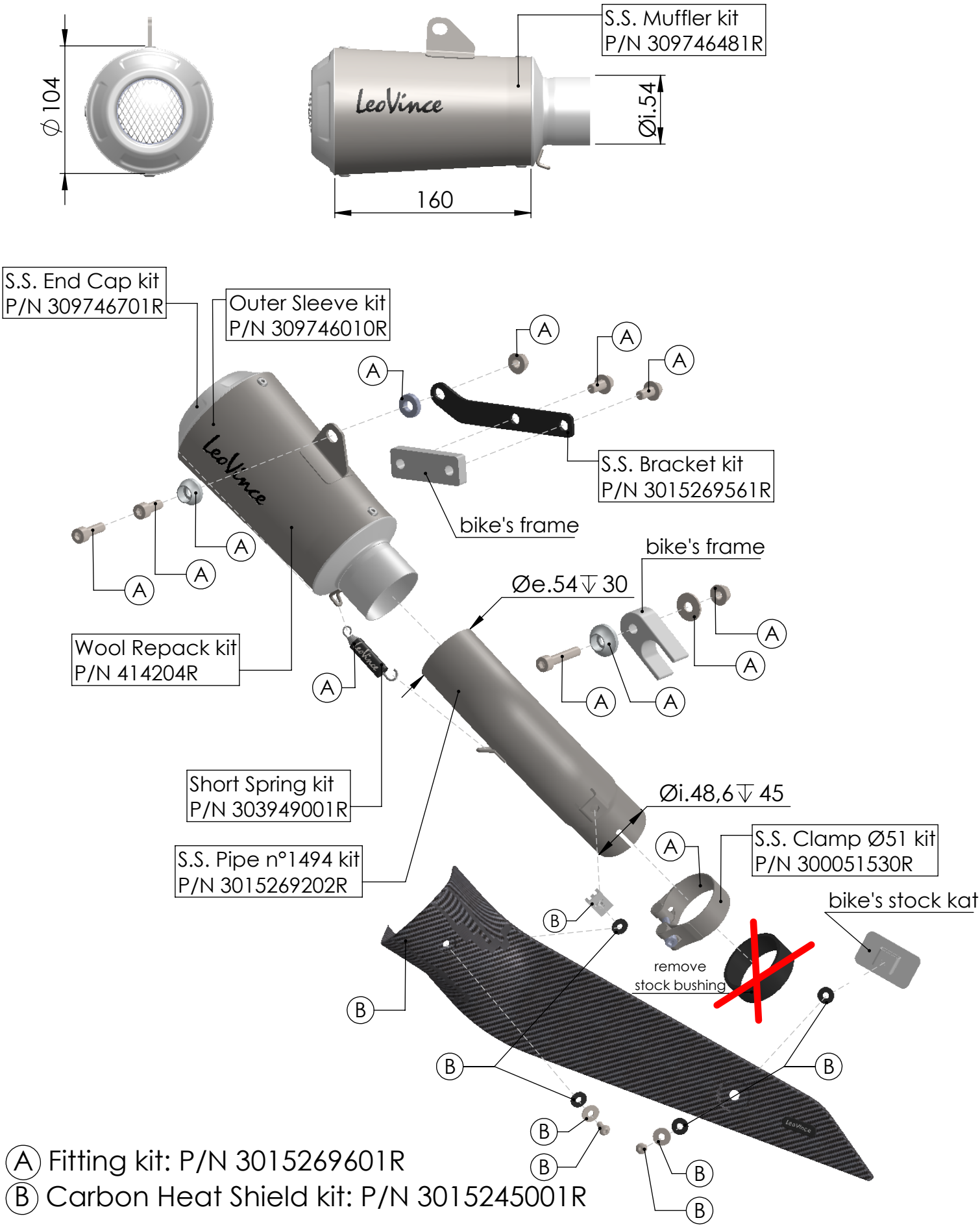


(A) Fitting kit: P/N 3015269601R
(B) Carbon Heat Shield kit: P/N 3015245001R

**ART. 15269 - SPARE PARTS**

SUZUKI GXS-S 1000 GX / GT

SLIP-ON LV-10 STAINLESS STEEL APPROVED