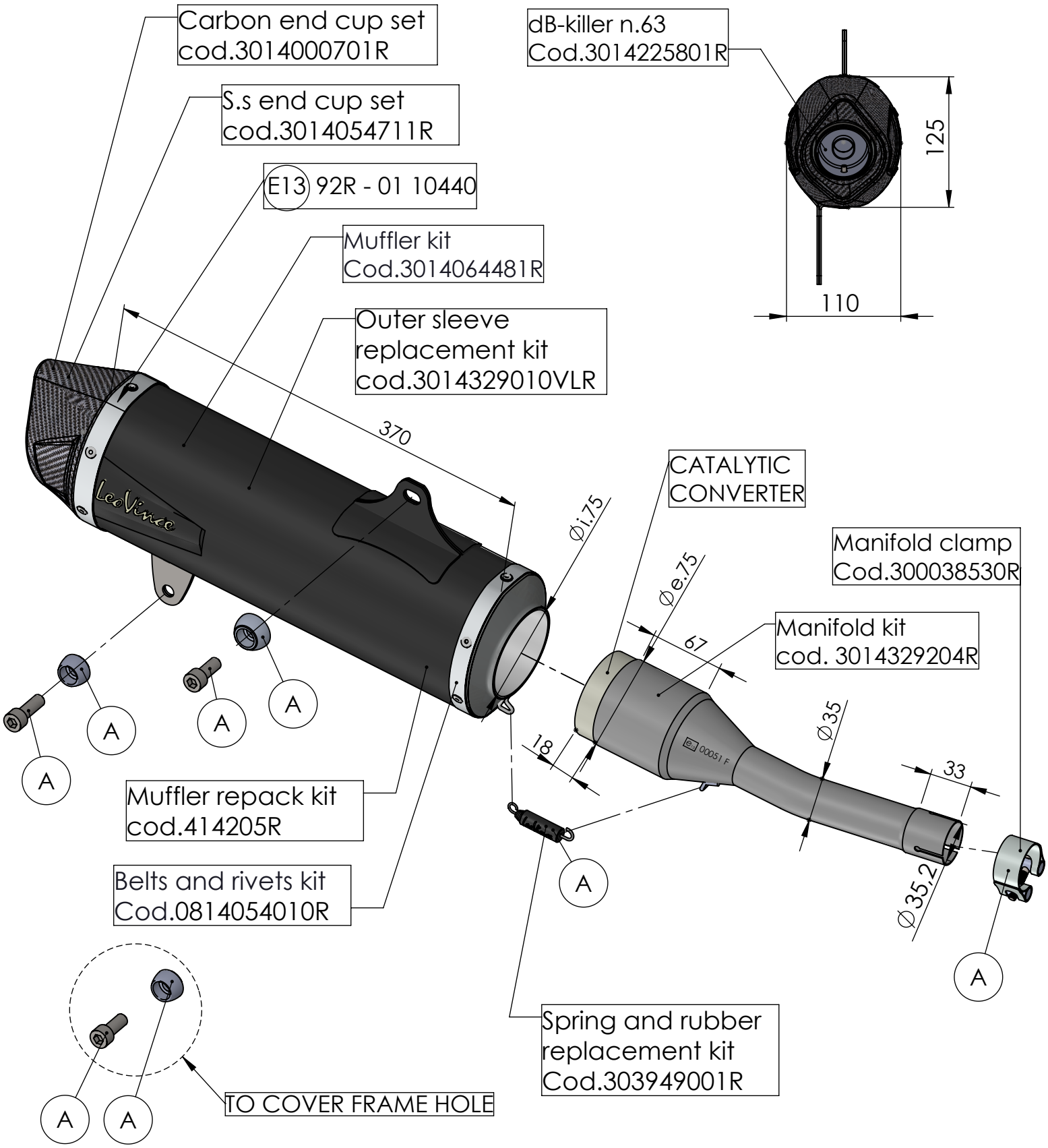

ART. 14064K SPARE PARTS

YAMAHA X-MAX 400 / TECH MAX

FITTING KIT cod.3014329601R